POLITECNICO
MILANO 1863

# Recent updates on a dual lift self-adaptive NH3-H2O chiller prototype: experiments at low evaporation temperature

Marco Guerra – Department of Energy, Politecnico di Milano

15.09.2015 – Sorption Friends Meeting

# the half effect cycle



- Is a well known family of double stage absorption cycles for low temperature heat driven operation.
- Suitable for air-cooled operations.
- For cooling applications [or refrigeration if a suitable refrigerant is used].
- Can be driven by low temperatures (down to 60°C with air cooled operation), with a COP roughly half the single effect one.

- Several cycle configuration are possible [Richter 1962, Alefeld 1985, Kern 1989, Erickson 1996, Mostofizadeh 1996,Infante Ferreira 2002]

- Among the several possible half effect cycle configutrations the dual lift half effect scheme is given in the following slide [including a rectifier for volatile absorbent fluid pairs]

# the dual lift half effect cycle



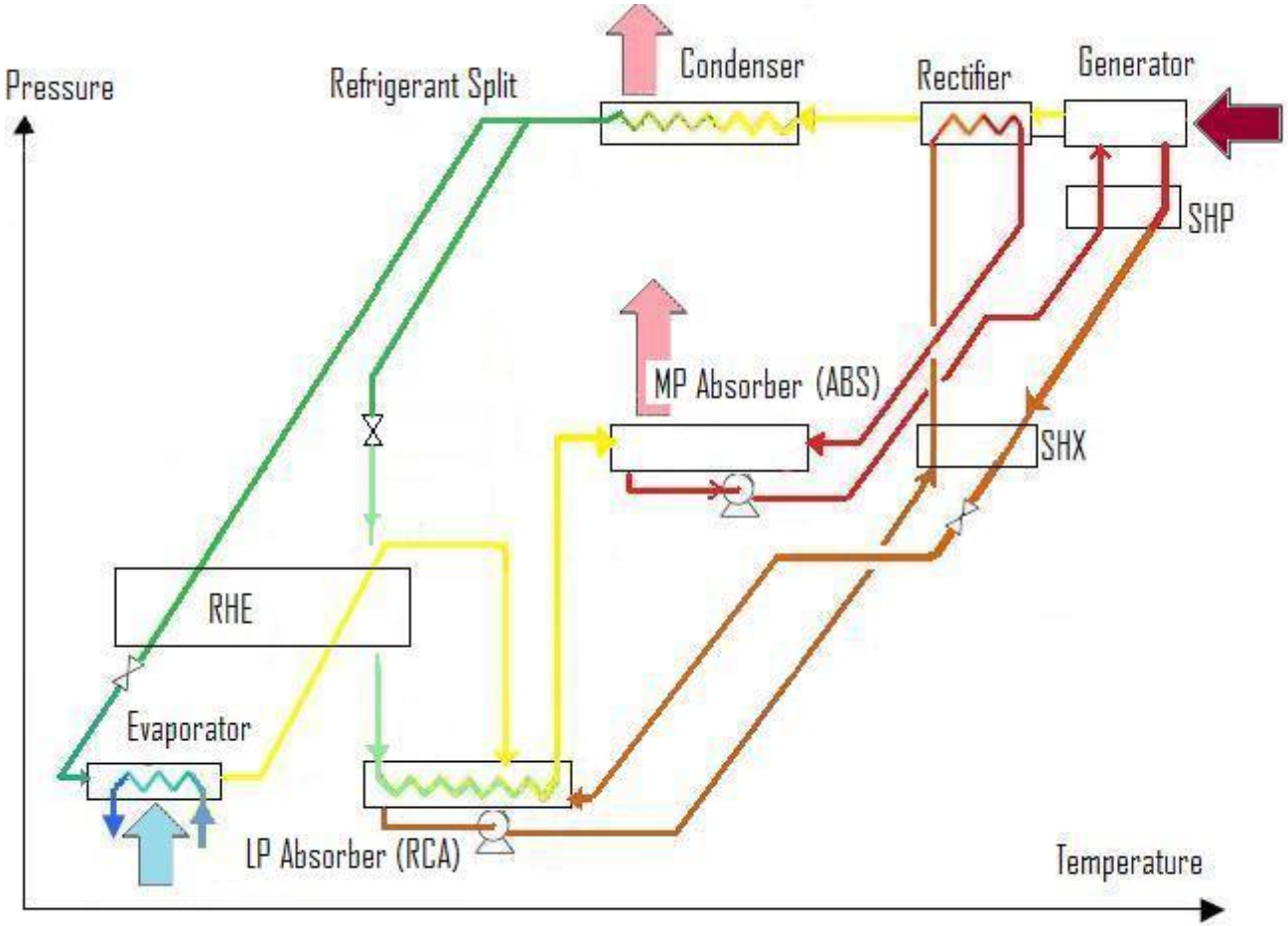

# The self adaptive dual lift half effect cycle



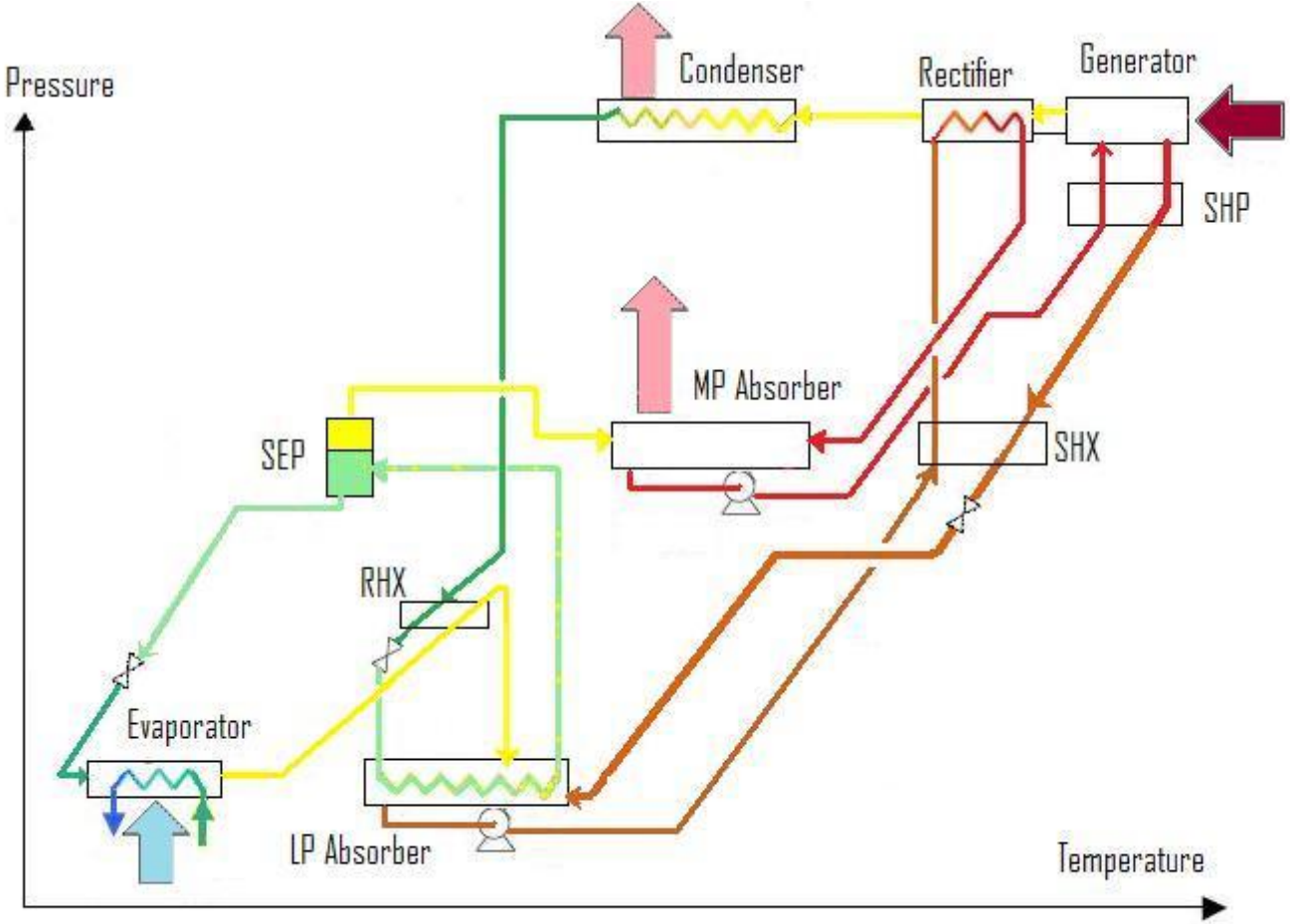

# The self adaptive dual lift half effect cycle



- The key new feature concept is vapor liquid separation versus liquid-liquid split

- There is a feed back effect between the evaporator and the RCA [low pressure refrigerant cooled absorber] capacity. The amount of medium pressure refrigerant evaporated in the RCA is exactly matching the heat load of the low pressure refrigerant to be absorbed.

- The entire steady state cycle operation has been fully numerically simulated. Last set of simulations have been done with the modelling tool developed at Polimi [see poster session]

- A 3 kW cooling capacity prototype has been realized originally to be coupled to a typical water temperatures and flow rate of an internal combustion engine cooling system.

- Later on two different set up have been tested at different conditions at the Polimi Relab calorimeter for different source water temperatures and flow rates and for different chilled water temperatures. The changes on the prototype were done on restrictors and water-ammonia charge only.

- The second prototype set up has been arranged for solar cooling conditions with a flat panels vacuum tubes solar collector system [maximizing electrical COP].

# Prototype unit under test

Demo prototype dimensions: W1000mm X D500mm X H1100mm

# Prototype unit under test

Demo prototype dimensions: W1000mm X D500mm X H1100mm

# Low temperature testing



- We are now presenting the experimental results of the third prototype arrangement testing with chilled brine outlet down to -15 °C.
- The driving hot water temperature and flow rate was set to have 90°C inlet and 85°C outlet.
- The air temperature at the condenser/absorber varied within 15°C to 32°C.

# Low temperature testing



- The prototype testing data have obtained with a fixed water ammonia charge.
- The electrical COP is calculated taking in account the wattage drawn by the unit only [fan & solution pump]
- The Relab calorimeter is  a certified lab according to ISO/IEC 17025
- The glycol concentration for the chilled brine has been titrated and the water-glycol mixture properties have been calculated according to manufacturer data.

# Test results



| #run | $T_{amb}$ [°C] | $T_{H2Oin}$ [°C] | $T_{H2Oout}$ [°C] | $T_{H2Oin}$ [°C] | $T_{H2Oout}$ [°C] | $Q_{evp}$ [kW] | $COP_{th}$ | $COP_{el}$ | | Thermal lift [Tcnd-Tevp °C] |
|---|---|---|---|---|---|---|---|---|---|---|
| 90 | 22.0 | 0.02 | -5.23 | 90.1 | 85.0 | 2.056 | 0.257 | 9.30 | | 47.2 |
| 92 | 28.0 | 0.07 | -5.00 | 90.0 | 85.0 | 1.986 | 0.252 | 7.94 | | 48.1 |
| 94 | 30.0 | 0.00 | -5.05 | 90.2 | 85.1 | 1.978 | 0.249 | 7.58 | | 48.5 |
| 96 | 32.0 | 0.06 | -5.09 | 90.1 | 85.2 | 1.810 | 0.240 | 6.35 | | 49.0 |
| | | | | | | | | | | |
| 104 | 22.0 | -4.52 | -9.46 | 90.1 | 85.3 | 1.800 | 0.249 | 9.47 | | 46.9 |
| 115 | 22.0 | -5.07 | -10.13 | 90.3 | 85.1 | 2.273 | 0.248 | 6.79 | +fan | 52.0 |
| 114 | 28.0 | -5.19 | -10.10 | 90.1 | 84.8 | 1.783 | 0.220 | 5.18 | | 50.8 |
| 113 | 32.0 | -5.01 | -9.88 | 90.0 | 85.0 | 1.252 | 0.184 | 3.54 | | 52.3 |
| | | | | | | | | | | |
| 107 | 15.0 | -9.98 | -14.89 | 90.1 | 85.6 | 1.601 | 0.241 | 10.20 | | 44.8 |
| 116 | 22.0 | -10.11 | -15.01 | 90.3 | 85.2 | 2.237 | 0.247 | 8.91 | | 51.5 |
| 109 | 32.0 | -9.97 | -13.73 | 90.1 | 86.1 | 0.754 | 0.129 | 2.32 | | 57.0 |

# Thermal COP graph



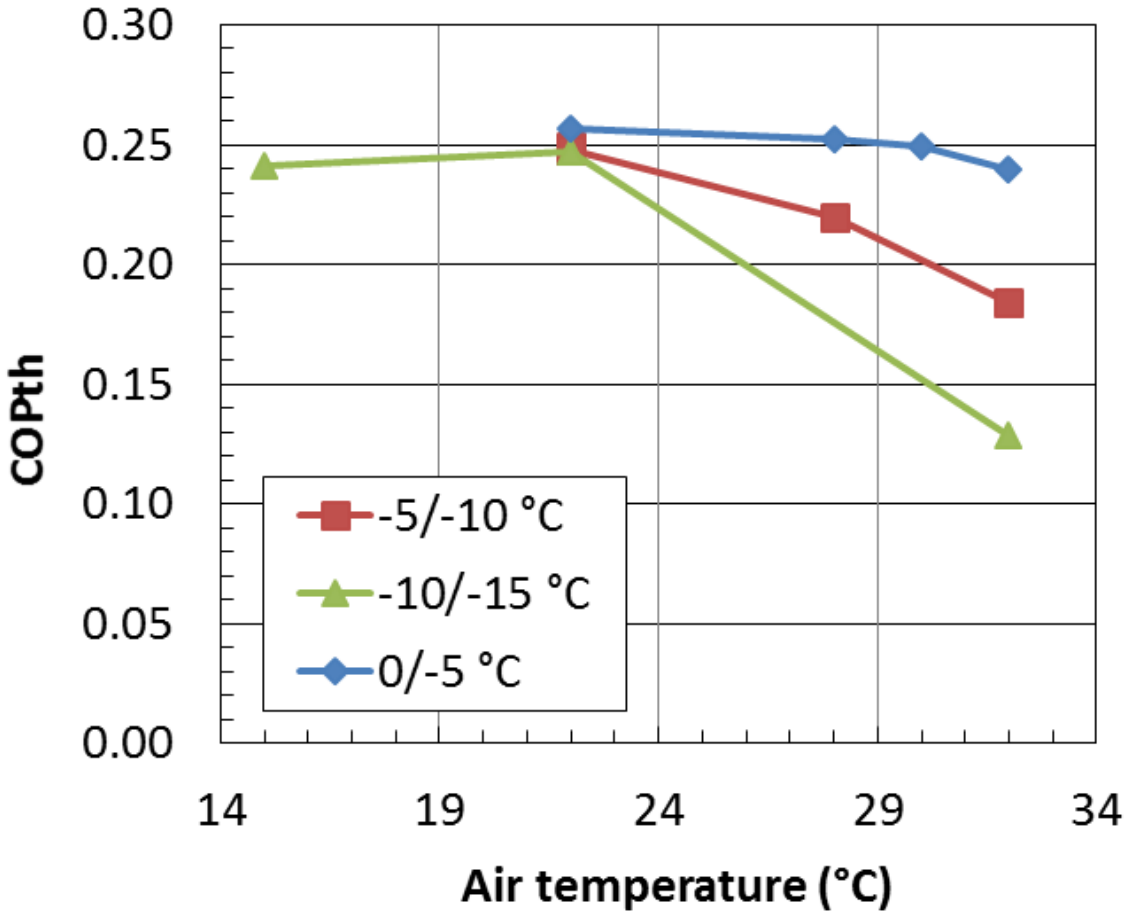

# Conclusion



- The prototype has proven to work up to 32°C outdoor ambient temperature with air cooled operation and down to -15°C leaving brine temperature with a generator driven at 90 °C to 85°C.

- The unit confirms its stability. The cycle starts delivering cooling effect in less than 4 minutes since the solution pump is started and the hot water is circulated in the generator.

- There is a potential trade off between maximum cooling capacity and $COP_{el}$, while the thermal COP looks basically unchanged until the outdoor temp reaches values above 30 °C and 28 °C for -5°C and -10 °C leaving brine temperatures.

- The water ammonia charge has been fixed for all tests. A potential for better efficiencies/capacities exist for narrower range of application with specifically trimmed charge.

# Startup example @ 30°C Tamb
# 90->80°C hot water; 12->7°C chilled water



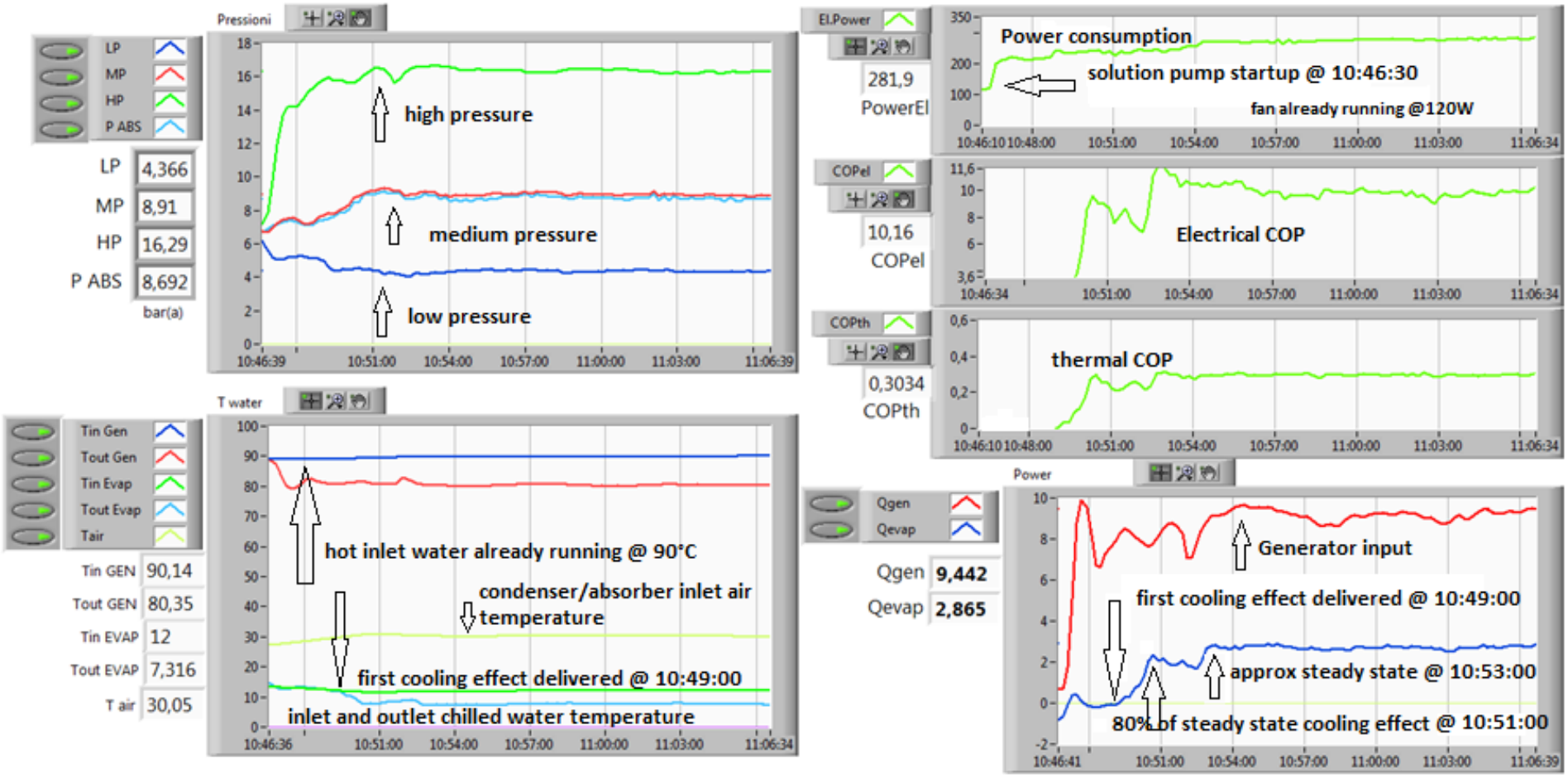

# Conclusion



- Full steady state thermodynamic analysis has been carried out over each test run.

- Each test run has been identified guessing a set of heat exchangers' UAs' to run the model of the cycle in order to give outputs matching the measured values [pressures, temperatures and heat transfer on the water side of generator and evaporator]. The model output provides all heat exchangers heat transfer, solution and refrigerant flow rates.

- The set of UAs' obtained to fit the experimental data have been used to run simulations to check for potential cycle improvements.

# Simulation model template



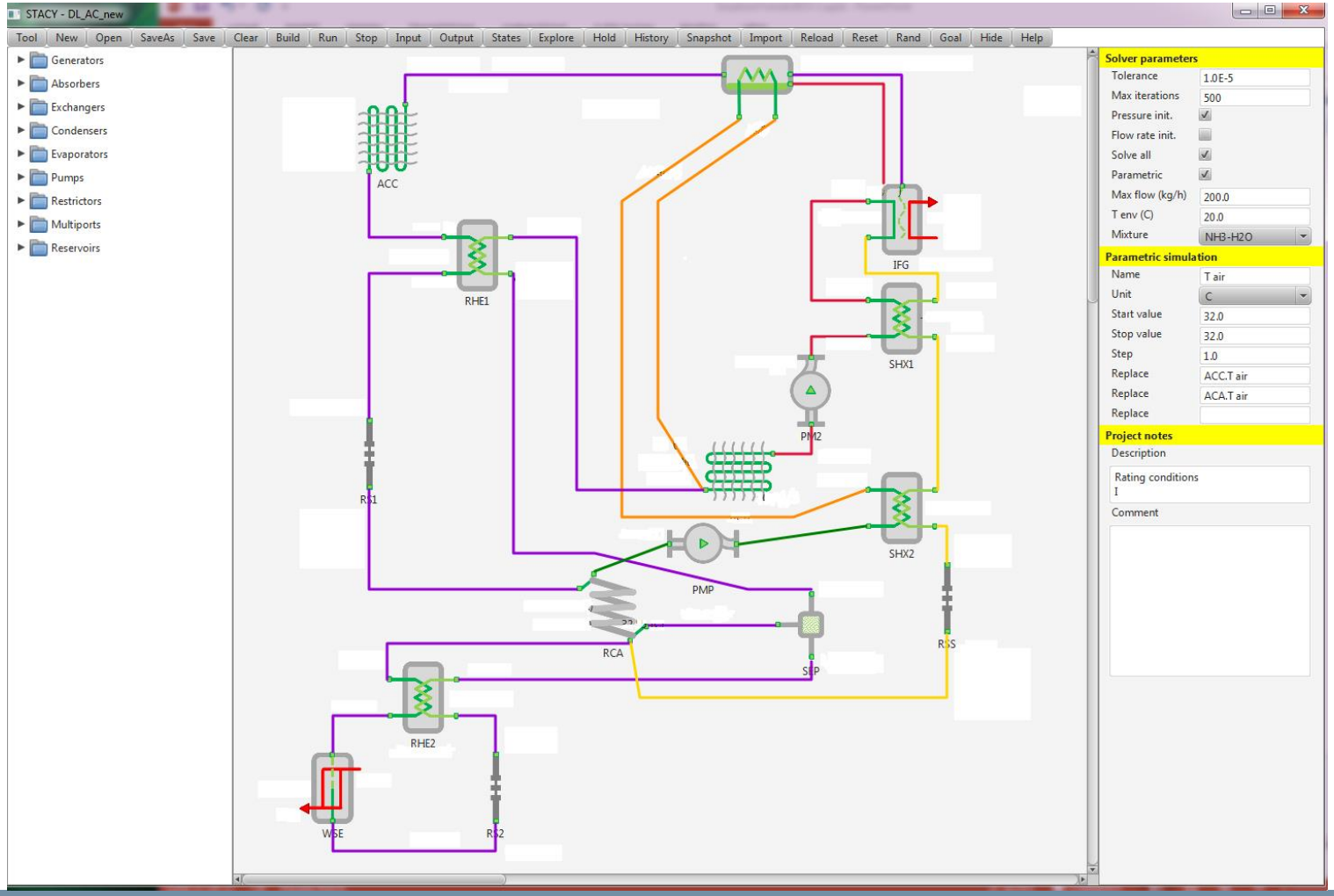

# Conclusion



- The prototype has been originally designed for different working condition. A specific design prototype [i.e. heat exchanger surfaces, pressure drop] could go for lower evaporator temperatures and higher condensing temperatures.

- The use of an extra refrigerant HX before the evaporator restrictor has been simulated with the modelling tool developed at Polimi. It could rise the efficiency of roughly 10%.

- The use of a concentration control vessel would expand the range of operation at better efficiencies.